MERIT INDUSTRIES, INC.®

www.meritind.com

T E C H 2 0 0 4

08/16/04

MOTHERBOARDS / MBs

FORCE: ECS

- CPU: Intel Celeron 533\566 MHz
- Memory: DIMM - (Dual Inline Memory Module) (PC133)

MAXX: Mitsubishi, Itox, Telco 586, & Unicorn.

- CPU: Windchip, Rise. 200 MHz
- Memory: DIMM (Dual Inline Memory Module) (PC100)

Note: Telco 586 requires SIMMs (Single Inline Memory Modules).

XL: DeAmeritek 486 & Telco 486

- CPU: AMD 66 MHz
- Memory: SIMM (Single Inline Memory Module) (Fastpage)

All MBs: System Battery: 3.0-volt lithium - CR2032 - System CMOS configuration.

I/O BOARDS - Input/output board.

FORCE: 3 in 1 I/O & USB I/O Board

- 3 in 1 I/O board used EVO and Fusion is the same and is not interchangeable with the USB I/O board.
- USB I/O (square I/O board) is used in the Radion, Elite, Vibe, Classic, and 19" Upright.
  USB I/O jumper settings for the FORCE Series games:
  J5B - USB Port setting for Elite & Upright games.
  J5A - USB Port setting for Radion & Classic games.

Note: If the jumpers are not set correctly, the I/O board will display an "Invalid Key" error.
Note: Check I/O board LEDs for voltages: Diodes D1: +3vdc, D2: +5vdc, D4: VSS & D3: USB VCC.
All four LEDs should be lit red. If not, an "Invalid Key" error will appear.

- Setup and calibration buttons are located on the I/O board.

MAXX: Three versions: I/O Heavy, I/O Lite & I/O Mini & Riser board.
Difference between the I/O boards:

- I/O Heavy has sockets.
- I/O Lite does not have sockets. Both are interchangeable.
- I/O Mini is not interchangeable with the I/O Heavy or Lite.

XL: CRT500 Zeus I/O Board & Riser board.
U5 - SECURITY KEY - The security key is a copyright protection device.
U11 - NVRAM DS1230 - Non-Volatile RAM. Retains game information (hi score, bookkeeping, etc)
U12 - EPROM - This is the operating system for CD-ROM based games and is classified as Drive C:\
U13 - FLASH RAM.

- ERROR READING DRIVE D: U12 EPROM does not match the CD software version.

Operating system errors:

- OPERATING SYSTEM NOT FOUND: Indicates a problem with the DeAmertek motherboard.
- DISC BOOT FAILURE: Indicates a problem with the Telco motherboard.
- Hard Drive based games: This message indicates that the motherboard not communicating with the hard drive.
- CD-based games: This message indicates that the motherboard not communicating with U12 EPROM on the I/O board. Check U12 EPROM for bent pins or damaged traces under socket.

Note: All DIPswitches DS2 & DS3 must be in OFF position.
Note: Earlier XL I/O boards have DS1 DIPswitches: 1, 4, & 8 must be in the OFF position.
Note: XL I/O board has small volume control incorporated on it. (Small blue disc)

Common I/O board facts:

- Sound level is controlled by soft volume control through SETUP on FORCE & MAXX games.
- Security key: round and silver with black handle. The key is a copyright protection device.
- DIPswitches located on the I/O board and should be in the off position.

SOFTWARE:

FORCE SERIES

FORCE 2002
Version: V8.00 - V8.06
Security Key: SA3050-XX

FORCE 2002.5
Version: V9.00 - V9.01
Security Key:SA3050-XX

- V8.01, V8.02 requires V9.01 CD for calibration, audio, and high score problems.

FORCE 2003
Version: V10.00 - V10.09
Security Key: SA3059-XX

FORCE 2003.5
Version: V11.00 - V11.05
Security Key: SA3059-XX

- V10.00 - V10.07 requires V11.05 CD for credit, reboot, and lockup problems.

FORCE 2004
Version: V12.00 - V12.10
Security Key: SA3068-XX

FORCE 2004.5
Version: 13.00 - V13.10
Security Key: SA3068-XX

- V12. 00 - V12.11 requires V13.00 CD for reboots and lockups.

FORCE 2005
Version: V14.XX
Security Key: SA3083-XX

MAXX SERIES

MAXX - First release
Version: R00, R01 - R06, V3.01 - V3.07
Security Key: SA3022-XX, SA3031-XX

- V3.01 requires V3.06 and V3.07 kits for lockup problems.

2K
Version: V4.00 - V4.01
Security Key: SA3035-XX

2K PLUS
Version: V5.00 - V5.01
Security Key: SA3035-XX

- V4.00, V4.01 require V5.01 for a calibration problem.

DIAMOND
Version: V6.01 - V6.05
Security Key: SA3042-XX

DIAMOND2
Version: V7.00 - V7.02
Security Key: SA3042-XX

- V6.00 requires V7.02 for the Golf game-pricing problem.

EMERALD
Version: V8.01 - V8.06
Security Key: SA3048-XX

EMERALD2
Version: V9.01
Security Key: SA3048-XX

- V8.01, V8.02 requires V9.01 for calibration, audio, and high score problems.

RUBY
Version: V10.00 - V10.09
Security Key: SA3056-XX

RUBY2
Version: V11.00 - V11.05
Security Key: SA3056-XX

- V10.00, V10.07 require V11.05 CD for credit, reboot, and lockup problems.

SAPPHIRE
Version: V12.00 - V12.10
Security Key: SA3065-XX

SAPPHIRE2
Version: V13.00 - V13.10
Security Key: SA3065-XX

- V12. 00 - V12.11 requires V13.00 CD for reboots and lockups.

JADE
Version: 14.XX
Security Key: SA3079-XX

Memory Requirements:
32 Meg of DIMM (32768K) requires FORCE 2002(.5), MAXX 1st release, 2K(+), Diamond(2) & Emerald(2).
64 Meg of DIMM (64512K) required FORCE 2003(.5), 2004(.5).2005. MAXX Ruby(2) & Sapphire(2) Jade.

XL SERIES
CD - R0, R0A, R0B, R0C, R0D, R1, R2, R3, R3A, R3B, R3C.
SECURITY KEY - SA3008-XX - R001, R002, R003, R004, R005.
EPROM - U11, U12, U12-R2, SA3014-03 U12-R3 / U12-R4.

XL5000
CD - R5A, R5B, R5D, R5E, R5G, R5H, R5I.
SECURITY KEY - SA3008-XX R006
EPROM - SA3014-03 U12-R3 / U12-R4.

XL6000
CD - R02, R04, R05, R07.
SECURITY KEY - SA3019-XX R00
EPROM - SA3014-04 U12-R00

XL GOLD
CD - R00, R01.
SECURITY KEY - SA3033-XX-R00 - Square key
EPROM - SA3014-04 U12-R00

XL GOLD
HARD DRIVE - R01.
SECURITY KEY - SA3033-XX R00 - Square key
SA3039-XX R00 - Button key

XL PLATINUM
CD - V1.01, V1.02, V1.03.
SECURITY KEY - SA3046-XX-R00 - Button key
EPROM - SA3014-04 U12-R00

XL DOUBLE PLATINUM
HARD DRIVE - V1.01, V1.02, V2.00, V2.01.
SECURITY KEY - SA3046-XX R00 - Button key

XL TITANIUM
HARD DRIVE - V3.00.
SECURITY KEY - SA3052-XX

XL TITANIUM2
HARD DRIVE - V4.00.
SECURITY KEY - SA3052-XX

Note: XL Gold CD R00: Will not work with Button security key (SA3039-XX R00), square key only (SA3033-XX).
Note: XL Titanium2: Final release of software for the XL Series.
Memory Requirements:
8 Meg of SIMM (8192K) required for R3 Series & XL5000
32 Meg of SIMM (32768K) required for XL6000, XL Gold, XL Platinum, XL Double Platinum & XL Titanium(2).

XL SOFTWARE
R3 SERIES
- R3A CD - Pix Mix Babes lockup, requires R3C CD.

XL5000
- R5B CD - Checkers lockup, requires R5I CD.

XL6000
- “Invalid Key Error”: CMOS time and date need to be set to current time period.
- “Insufficient Disk Space”/”0 Files Copied”/Bad Command or Filename”: Indicate a conflict with EPROM at U12.
- R02 CD - If the disc loads slowly & responds slowly, the R07 CD is required.
- If the game resets to files copied and repeats, reseat the SIMMs. 32768K memory is needed at Memory test.

XL GOLD & PLATINUM CD VERSION
- XL Gold CD-R00: If screen calibration drifts and then locks up, the R01 CD is required.
- If the logo picture remains on the screen without changing for a long time period, there is insufficient memory. 32768K memory is needed.
- If the logo picture comes up and goes to an “Operating system not found” error, there is a missing or defective 512K Video Dram IC chip at U38 (DeAmeritek motherboards).

XL GOLD & XL PLATINUM HD VERSION
- If the game logo appears on the screen, then resets:
  There is insufficient memory. 32768K memory is needed and the year must be set to 2001 or later.
- “Invalid Key Error”: There is insufficient memory. 32768K memory is needed.
- “No Sound Driver Loaded: There is insufficient memory. 32768K memory is needed.
- “Invalid Drive Specifications” (with a D:\ prompt flashing). Jumper JP1 (EPROM ENABLE) must be removed.
- If “Free Play” appears on the screen and cannot be changed through setup options, the date and time must be set to present time period.

XL PLATINUM CD & HD VERSION
- HD version: A calibration problem requires CDs PA0022-01 & PA0022-02, V2.00
- CD version: A calibration problem requires CDs Rev B PG3004-02 V1.02.

Note: Newer versions of Platinum software have a three-point calibration.
Once the two-point calibration is complete:
1. Press the icon reading LOW COLOR CALIBRATION; a single dot will appear on the screen,
2. Touch it for two seconds and remove your finger. The screen will return to the normal menu.
   **Current versions will have the third dot come up automatically, after the second dot.

CMOS CONFIGURATIONS

ECS (FORCE)

1 - Plug a keyboard into the bottom **purple port** connector (PS2)
2 - Power the game on.
3 - Press **DEL** to enter **SETUP**.
4 - Arrow over and down to **Load Optimized Defaults**.
5 - Press **ENTER**. Press **Y** for **"Yes".**
6 - Press **ENTER**. Press **F10**.
7 - Press **ENTER**. The game should reboot. Unplug the keyboard.

Mitsubishi / Itox (MAXX)

1 - Plug in a keyboard and turn on the game.
2 - Press **F2** to enter **Phoenix BIOS Setup Utility**.
3 - Press **F9** to load **Setup Default**.
4 - At Setup confirmation, press **ENTER** with YES shaded.
5 - Press **F10**, save and exit.
6 - Press **ENTER** for confirmation with **YES** shaded, then unplug the keyboard.
7 - The system should reboot.

Telco 486 (XL) & Unicorn 586 (MAXX) (Telco 586)

1 - Plug a keyboard into **J4** (Telco XL) or **purple port** (Unicorn MAXX).
2 - Press the **DELETE** button to enter Setup.
3 - Select **"LOAD SETUP DEFAULTS"** Press **Enter**.
4 - Press **Y** for Yes, Press **Enter**
5 - Select "**STANDARD CMOS SETUP**"
6 - Press **Enter**. The settings should be as follows:

- Date: Set to current date.
- Time: Set to approximate time.
- Hard Disks: All " TYPE" and "MODE" fields set to "AUTO"
- Drive A: 1.44M, 3.5 in
- Drive B: None
- Video: EGA/VGA
- Halt On: All, But Keyboard

7- After all settings have been changed or verified, press **Esc**.

8a through 8d for boot sequence for Unicorn 586 only, for Telco 486 continue to Line 9

8a - Arrow download to **"BIOS feature setup"** Press Enter.
8b - Arrow down to **"boot sequence"**
8c - Use the **Page Up** or **Page Down** keys to change the sequence to: **CD-ROM, C, A**
8d - After all settings have been changed or verified, press **Esc**.
9 - Press the **F10** key. Press **Y** for Yes.
10 - Press **Enter** and unplug the keyboard. The system should reboot.

DeAmertek: Has 2" fan in upper right hand corner.

1 - Plug keyboard into J4. Power On. Press **DEL** to enter SETUP.
2 - Use DOWN ARROW to **"Load ROM Default Values."**
3 - Press **ENTER**. **NOTICE** message will appear on screen.
4 - Press **ENTER** Use UP ARROW to "System setup."
5 - Press **ENTER**. Use DOWN ARROW to **Diskette Drive A.**
6 - Press PAGE UP to "**Not installed"** appears.
7 - Press **ESC**. Main Menu appears on screen
8 - Use DOWN ARROW to highlight **Boot Options.**
9 - Press **ENTER**. Press PAGE UP to **C: ONLY** appears.
10 - Use DOWN ARROW to **"Post Errors"** PAGE UP to **Disabled**, then press **ESC.**
11 - Use DOWN ARROW to **Green PC** feature, press ENTER.
12 - A customized gray box appears. PAGE UP to **Disabled**
13 - Press ESC Press F10, **WARNING!** Appears on screen. Press **Y** for Yes
14 - Press **ENTER**. Unplug keyboard from J4. System should reboot.

DeAmeritek: HD-Based

Note: The CD-based CMOS configuration must be completed first before proceeding with the HDD configuration.
Note: The JP1 EPROM Enable jumper must be removed on the I/O board.

1 - Plug a keyboard into J4. Press **Del** to enter SETUP.
2 - Arrow down to **Fix Disc Setup**, then press **Enter** three times.
3 - Press **Esc** two times, back to the main menu.
4 - Press **F10** to save and exit, select **Y** for Yes.
5 - Unplug the keyboard from J4. The system should reboot.

DRIVE DESIGNATION

XL / MAXX / FORCE
Drive C:\ Hard drive
Drive G:\ CD-ROM drive (downloading software)

XL - CD based only
Drive C:\ is the U12 EPROM.
Drive F:\ is the CD-ROM drive.

Hard drives: (HD) HDD

XL / MAXX / FORCE

- Disc Boot Failure: Indicates a defective hard drive.
- Operating System Not Found: Check the IDE ribbon cable from HD to motherboard or defective HD.
- Critical Error, Abort, Retry, Fail: Indicates a defective hard drive or defective IDE ribbon cable.
- CRC Error Reading Drive C: Indicates a defective hard drive.
- Smart Failure: Indicates a defective hard drive.
- Bad Command or File Name: This may indicate a corrupted hard drive or motherboard. (Corrupt CMOS)

Note: Reloading the CDs may help correct the “BAD COMMAND or FILE NAME” error.
Note: Performing a CMOS configuration may also help correct a “BAD COMMAND or FILE NAME” error.

FORCE 2003/2004 & MAXX Ruby / Sapphire

- **Error 64:** Indicates a defective hard drive.
- **Error 67:** Indicates a defective hard drive.
- **Error 97:** Indicates a defective hard drive.
- **Error 94:** Indicates that the hard drive is connected to the Secondary IDE.
  The hard drive must be connected the Primary IDE connector and the
  CD-ROM drive must be connected to Secondary IDE port.
- **Checking for bad blocks:** Possible corrupted hard drive. Try reloading the CDs. May correct the problem.

XL

- Invalid drive specifications: Possible problem with the IDE ribbon cable or CD-ROM drive.

Hard Drive checksum test:

1. Turn power off.
2. Turn on Dipswitch DS2 - 8.
3. Power the game up.
4. The test will run for about 20-25 minutes.
5. If the test passed, the game will go into attract mode.
6. If the test failed, a “Checksum Error” message displays. This indicates a defective hard drive.

Note: A hard drive can still be defective, although it may pass the hard drive test.

DOWNLOADING

CD:

- Make sure the CD is installed correctly, with the logo facing up.
- Check the CD for scratches or defects. Try a different set of CDs.
- Make sure the CDs are of the same revision.
- To verify that the CD ROM drive is being detected by the motherboard, install CD2 and power the game up.
  If the game acknowledges CD2 with an error message to "Re-install CD1 and start the process over",
  Then CD1 is the problem.

CD ROM:

- Jumper setting on the back of the CD-ROM drive must be set to MASTER (MA).
- Try a different CD-ROM drive to determine whether the existing CD-ROM drive is defective.
- **Error 13.9**: This error can indicate either defective set CDs or CD-ROM drive.
- Rebooting after download: The game will reboot after Linux* software is loaded.
  A questionable CD-ROM drive may have a problem by not reading the CDs correctly. Try a newer CD-ROM drive.

Note: The age and condition of the CD-ROM drive are factors in downloading problems.

CMOS CONFIGURATION:

- A problem with CMOS configuration can cause the motherboard to not see the CD-ROM drive.
  See CMOS Configuration Settings page.

CONNECTION PROBLEMS:

- Make sure that the Centronics cable is connected correctly and that it is pushed all the way down in place.
  Try another Centronics cable.
- IDE ribbon cable: Use IDE ribbon cable connected between the CD-ROM drive and the motherboard.
  Use the fan power connector to power the CD-ROM drive.
  The IDE ribbon cable going to the motherboard will go to the Secondary IDE connector on the CD-ROM drive.
- **CD-ROM error:** CD-ROM must be to Secondary IDE port.
  - ❑ Hard drive IDE ribbon cable must be connected to the Primary IDE Port (top port) on the motherboard.
  - ❑ CD-ROM drive IDE ribbon cable connects to Secondary IDE port (bottom port) on the motherboard.

SOFTWARE:

- CD1 gets about 51% of loading and detects a hard drive error; the hard drive is defective. This is determined
  After a different set of CDs and different CD-ROM drive are used and the reloading attempt fail again at 51%.
- CD2 is loads to about 82-87% before asking again for CD2 to be installed,
  This would indicate that CD2 is defective. Try a different set of CDs.
- CD3 is installed and ejects, asking for CD4, this indicates that CD3 is defective.

Note: CD3 problem is only seen with Linux OS: 2004(5)/2003(5) & Ruby(2)/Sapphire(2)

TOUCHSCREEN CONTROLLER - Microtouch controllers.

- The game boots up to the **MERIT SOFTWARE LICENSE AGREEMENT** on the screen without the
  "**Accept**" and "**not-accept**" icons being displayed. Check the following:
  1 - Make sure the green LED on controller is lit. Orange wire to +12 vdc and gray wire to black wire (ground)
  2 - Touchscreen controller drivers may not match the software version being loaded.

Note: A Microtouch controller acquired through a non-Merit distributor may not have the same drivers as a
Microtouch controller that was used in dedicated Merit games. The controller may have been replaced in the past.

LOCKUPS \ REBOOTS

All games

Fans: Make sure fans (on the CPU chip, power supply (if any) and hood, etc.) are clean and clear of dirt.

Memory: FORCE, MAXX (DIMMs) & XL (SIMMs)

- Defective DIMMs or SIMMs can cause games to lock up or reset and can also create graphics problems.
- Continuous repeating tone or tones may indicate a hardware memory problem with the DIMM. Try reseating or replacing the DIMM(s)
- Check and reseat SIMMs. Check for good or bad SIMMs by reading the memory numbers.

Memory corruption: Corrupted Software or missing files on the hard drive.

- Corrupted software on a hard drive can also be responsible for games rebooting and locking up.
- Clearing memory or reloading the CDs may help correct the problem. Refer to memory clear section.
- Some software versions had problems with lockups and reboots. Check game version.

Monitors & Touchscreens: Games with CRTs

- Touchscreen cable should not be positioned under or on top of the yoke of the monitor.
- Touchscreen controller cable should not be positioned near the flyback transformer.

Common

- A defective motherboard can also be responsible for lockups and reboots.
- A defective power supply can create problems with lockups and reboots.

Note: If the fan in the power supply has failed, it is recommended to replace the power supply.

Voltage: Location / wall outlet / grounding

- Heavy devices: A refrigeration unit (beer box) or compressors on the same line will cause lockups.
- The location itself may have a problem with poor wall voltage or grounding with electrical system.
- Reversed polarity at the wall outlet will effect game operation.
- Improper wall voltage or low voltage can be a factor.
- Proper grounding is necessary for game and touchscreen operation. Proper grounding is also a safety issue.

MAXX / XL

Contact connection:

- Dirty edge pins on the I/O and riser boards.
- Dirty edge pins on SIMMs or DIMMs.
- IDE ribbon cable: Dirty pins or defective do to age.

XL - (Causeway Error 9 & 11)

- Check for scratched or faulty CDs.
- CD-ROM drive: Old and defective.
- Defective IDE ribbon cable.
- Dirty edge pins on the I/O and riser boards.
- Dirty edge pins or defective SIMMs.
- No sound driver loaded: Possible defective motherboard assembly or insufficient memory.
- Memory corruption: Try a two-button memory clear.

Note: A causeway error does not refer to any direct problem, but only indicates a problem exists.

MEMORY CLEAR

Two button clear - All games.
Turn off the game.
Locate the SETUP & CALIBRATE buttons.
Press and hold the SETUP & CALIBRATE buttons while turning the game back on.
After about 20 seconds, a message TWO BUTTON CLEAR DETECTED, PLEASE RELEASE THE BUTTONS should appear on the screen. Upon seeing this message, release the buttons. The game will continue to bootup.

DIPswitches - FORCE 2003, 2004, 2005 series / MAXX: Ruby, Sapphire, Jade series only.
DS4 & 7: Complete memory clear. Resets the game to the factory defaults. Clears ALL memory on hard drive.
DS6: Hardware configuration: Identifies system hardware and reconfigures the device drivers for the motherboard.

Keyboard clear - Hard drive-based games only.
Turn off the game.
Plug in the keyboard, and then power the game up.
Allow the game to boot up into the first menu screen.
Press the **ESC** key. The screen should display **C: MERIT2**
Type in **cd..** And press **ENTER**. A **C:\ prompt** will appear.
Type in **del nvram.dat** and press **ENTER**. A **C:\ prompt** will reappear.
Turn off the game and unplug the keyboard, then turn the game back on.
Note: If a Bad Command or File name appears, chances are the del nvram.dat was not typed correctly.

Reloading software - CDs
Reloading the CDs will reformat the hard drive and restore the software to an original default level.

Note: The two-button memory clear should be tried first, before doing the keyboard clear.
Note: A keyboard memory clear will only work with hard drive-based games.
If there is a need to clear memory beyond two-button memory clear on a CD-based XL game,
You will need to use a different CD revision or different version of software.
Note: For hard drive-based games, should a two-button memory and/or a keyboard clear not correct the problem,
Reloading the software would be the next step.
Note: The keyboard clear procedure does not work with FORCE 2003/2004 & MAXX Ruby/Sapphire software versions.

SECURITY KEY: Copyright protection device
INVALID KEY ERROR.

All Games:

- Check time & date in CMOS configuration.
- Check for a defective security key.

FORCE:

- LEDs: Check LEDs on the I/O board: D1: +3vdc, D2: +5vdc, D4: VSS Voltage & D3: USBVCC.
  All four LEDs must be lit in order for the FORCE I/O board to function correctly.
- USB cable: Make sure USB cable is seated all the way at the I/O board and ECS motherboard.
- Check for a defective I/O board, or if the I/O board was replaced, check the jumpers.
  Refer to FORCE Series on Tech notes for I/O board (USB port)
- Dipswitch DS6: Device drivers may need to be reset. *Check Memory Clear section / DIPswitches.*

Note: FORCE2004 software requires all hardware to be correct. Hard drive, controller, I/O board, etc.

MAXX (Unicorn)

- Audio board: Check to see if the audio board is seated or installed correctly.
  The socket on the Unicorn MB is larger than audio board connector.

XL / MAXX

- Check for dirty edge pins on I/O & riser boards.
- Check for a defective I/O board or riser board.

XL

- Check memory. If there is under 32 Meg (32768K) for a XL6000, Gold, Platinum, or Titanium game,
  The adapter board for the button key may have a poor contact connection. Reapply red gel from the kit.

Note: Invalid key error occurs when attempting a download of newer software, chances are that the new security key was installed first and the attempted download either failed or did not occur.
This would indicate a loading problem. Refer to DOWNLOADING page of TECH2004 for possible solution.

TOUCHSCREENS: (T\S)

Microtouch:

- SMT-3 Controller XL & MAXX games (white box)
- SMT-4 FORCE games only. (black box)
- Green LED on controller lit is at half brightness and goes to full brightness when the screen is touched.
- Overlay functions on capacitance.

Note: Green LED is flashing from 1 to 5 times, self-diagnostics detected an error or the controller may be defective.
Note: Green LED is not lit: Check +12 vdc. The touchscreen and/or controller may be defective.

ELO Graphics: (Used in XL & early Blue MAXX countertop games)

- Controller is in a silver box. Requires +5.0 vdc.
- Overlay functions on SAW/Sound Acoustic Waves. Sound waves are reflected across the screen.
- Normal Operation: The green LED will flash constantly; LED lights steadily when the screen is touched.
- Touchscreen overlay has ridges around the edge that must be kept clean for the screen to respond correctly.
- Touchscreen cable is on left side of CRT.

If green LED is steadily lit:

- Check for objects that may be attached to the screen.
- Make sure the bezel is dry and not stuck to the screen.
- Check the grooves etched around the outside edge of the screen for dirt.
- The controller may be defective.

Calibration:

1. Locate and press the **CALIBRATE** button.
2. Touch the first dot that appears in the corner for about 2 seconds, and then pull your finger away.
3. Touch the second dot that appears in the opposite corner for about 2 seconds, and then pull your finger away.
4. During the touchscreen test, the cursor should follow your finger anywhere you touch the screen.

Note: XL Platinum, MAXX Emerald and FORCE 2002 have a three-point calibration.

CALIBRATION / LOCKUP PROBLEMS:

Touchscreen:

- Problem over the whole area of the screen: Recalibrate the touchscreen.
  If the calibration is still off, replace the touchscreen.
- Problem in one area of screen: check for scratches or nicks on the screen.
  Scratches or nicks are found: Replace touchscreen
- Loses calibration: Check the ground pin on the line cord. Replace AC line cord. Check AC wall outlet.

Grounding:

- Improper grounding will affect the operation of the touchscreen.
- Double-touch problems (i.e., taking two or three cards away in Tri Towers & 11-UP after only one touch to the screen, make sure the A/C plug and wall outlets are properly grounded.

CRT \ Monitor:

- The touchscreen cable should not be positioned under or on top of the yoke of the monitor.
- The touchscreen controller cable should not be positioned near the flyback transformer.

Note: If the cable is not properly installed, touchscreen response will be 180 degrees out of sync.
Note: Microwave ovens and neon lights can and will interfere with the calibration of the touchscreen and should not be within 6 feet or 2 meters of the game.

Cleaning:

Use only soft a cloth with water or denatured alcohol.

TOUCHSCREEN OVERLAY CONNECTOR

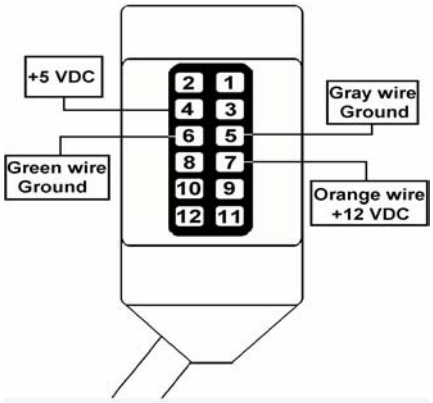

MONITORS:

Eygo CGA
Type 2, 3, 4, 5, 6
No power up:
R103 & R104 change to 75K ohm - 1 watt each
IC1 - TDA8380 & Q101 - 2SC4742
No vertical defection:
Related capacitors to be replaced:

C412 - 10 uf / 25 vdc	C403 - 2.2 uf / 16 vdc
C413 - 4.7 uf / 160 vdc	C404 - 1 uf / 50 vdc
C414 - 1 uf / 25 vdc	C407 - 100 uf / 16 vdc
C501 - 10 uf / 25 vdc	C408 - 8.2 uf / 50 vdc
C806 - 100 uf / 100 vdc	

Note: If is C806 is missing, leave it empty.

Eygo TUV CGA
Type 10, 11, 12.
No power up:
Replace Q502 - 2SC4769-2
Replace C814 - 100 uf 35 vdc

Wells Gardner CGA
Type 13, 34.
No power up:
C011- From: 22 uf / 35 vdc
22 uf / 160 vdc
C015 - From: 100 uf / 35 vdc
To: 100 uf / 160 vdc

Ducksan CGA
Type 19, 20
No power up:
C804 - From: 1 uf / 50 vdc
To: 10 uf / 50 vdc

Ducksan VGA
Type 55
No power up:
C804 - From: 1 uf / 50 vdc
To: 10 uf / 50 vdc

Ducksan VGA
Type 52
Dim tube: Replace tube
Video Display - 1-800-241-5005
M34KUK-35X03, tube replacement.

Telco VGA
Type 51
Color problem:
Replace IC 601: color amplifier
Replace FR102: 2.2 ohm 1 watt resistor

Video problem:
Dim screen, dark screen, lack of color, washed out color, over driven color, or no color
Possible solution:
Replace video amplifier chip on the neck board of the monitor:
LM1203, GL1160, DBL2056 & NTE7081.

Service numbers
Tatung - 800-829-2850
Telco - 800-678-3526
Wells Gardner - 800-336-6630